C.I.P.	8 Gauge Industriel Country of Origin: US	TAB. VI Date 84-06-14 Revision 15-05-19

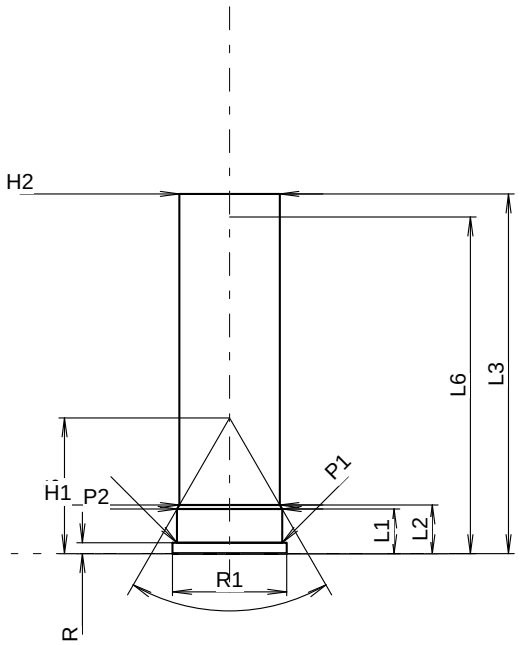

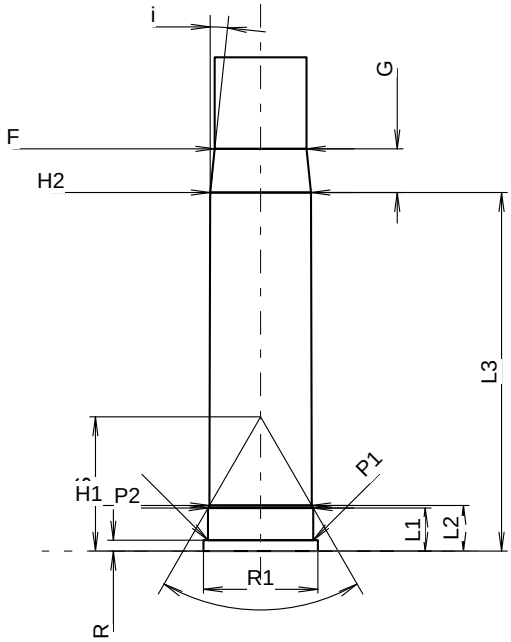

Scale 1:1.74

CARTRIDGE MAXI

Lengths

L1	=	10.29	
L2	=	11.20	
L3 1)	=	82.80	
L4	=		
L5	=		
L6	=	77.47	

Case Head

R 1)	=	2.54	-0.18
R1	=	26.29	
R3	=		
E	=		
E1	=		
e min	=		
δ	=		
f	=		
β	=		

Powder Chamber

P1	=	24.21
P2 *	=	24.21

Junction Cone

α *	=	60°
S *	=	31.26
r1 min	=	
r2	=	

Collar

H1 *	=	23.16
H2 1)	=	23.16

Volumes [cm³]

VC	=	
Va 1	=	
Va 2	=	

Pressures (Energies)
Method Transducer [Va1]

Pmax	=	2200	bar
PK	=	2530	bar
PE	=	2860	bar
M	=	17.00	

Miscellaneous Dimensions

Fe	=	
delta L	=	

CHAMBER MINI

Lengths

L1	=	9.91
L2	=	10.53
L3 1)	=	82.55

Breech

R 1)	=	2.53
R1	=	26.31
R2	=	
R3	=	
r	=	

Powder Chamber

E	=	
P1	=	24.26
P2 *	=	24.26

Junction Cone

α 1)*	=	60°
S *	=	30.92
r1 max	=	
r2	=	

Collar

H1 *	=	23.55
H2 1)	=	23.19

Commencement of Rifling

G1 1)*	=	
G 1)	=	10.03
α1	=	12°
h	=	
s *	=	
i 1)*	=	5°
w	=	

Barrel

F 1)*	=	21.08
Z 1)	=	21.08

Volumes [cm³]

V(ET)	=	
V(T)	=	

Dimensions in << mm >>
Dimensions and Tolerances for Proof Barrels
see Appendix CR 3.

Notes: 1) Check for safety reasons
* Basic dimensions