C.I.P.	9 x 17 Country of Origin: DE	TAB. VI Date 84-06-14 Revision 94-05-31

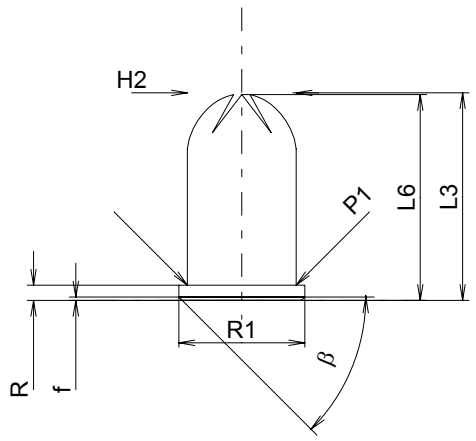

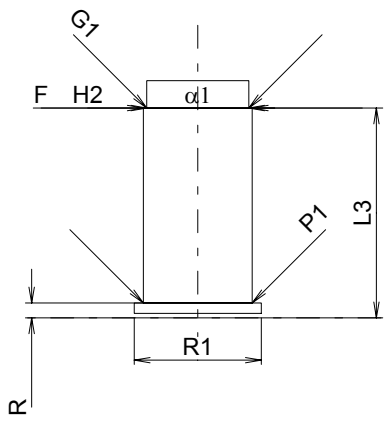

Scale 1.5:1

CARTRIDGE MAXI

Lengths

L1	=	
L2	=	
L3 1)	=	18.30
L4	=	
L5	=	
L6	=	18.15

Case Head

R	=	1.35
R1	=	11.10
R3	=	
E	=	
E1	=	
e min	=	
δ	=	
f	=	0.30
β	=	45°

Powder Chamber

P1	=	9.58
P2	=	

Junction Cone

α	=	
S	=	
r1 min	=	
r2	=	

Collar

H1	=	
H2 1)	=	9.58

Volumes [cm³]

VC	=	1.08
Va 1	=	0.40
Va 2	=	

Pressures (Energies)
Method Transducer [Va1]

Pmax	=	1450 bar
PK	=	1668 bar
PE	=	1885 bar
M	=	

Miscellaneous Dimensions

Fe	=	
delta L	=	

CHAMBER MINI

Lengths

L1	=	
L2	=	
L3 1)	=	18.50

Breech

R 1)	=	1.30
R1	=	11.20
R2	=	
R3	=	
r	=	

Powder Chamber

E	=	
P1	=	9.60
P2	=	

Junction Cone

α	=	
S	=	
r1 max	=	
r2	=	

Collar

H1	=	
H2	=	9.60

Commencement of Rifling

G1 *	=	9.00
G	=	
α1	=	180°
h	=	
s	=	
i	=	
w	=	

Barrel

F *	=	9.00
Z	=	9.00

Volumes [cm³]

V(ET)	=	1.37
V(T)	=	

Dimensions in << mm >>
Dimensions and Tolerances for Proof Barrels
see Appendix CR 3.

Notes: 1) Check for safety reasons
* Basic dimensions