C.I.P.	12 x 35 Country of Origin: DE	TAB. VI Date 06-05-16 Revision

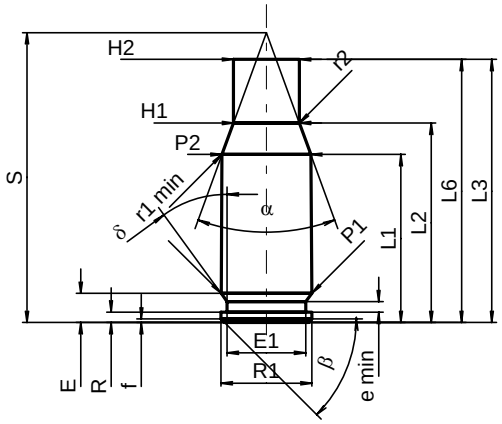

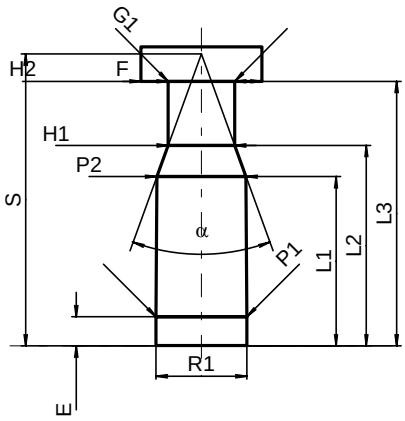

Scale 1:1

CARTRIDGE MAXI

Lengths

L1 1)	=	22.22
L2	=	26.38
L3	=	34.80
L4	=	
L5	=	
L6	=	34.80

Case Head

R	=	1.37
R1	=	12.01
R3	=	
E	=	3.86
E1	=	10.39
e min	=	1.40
δ	=	36°
f	=	0.47
β	=	45°

Powder Chamber

P1	=	11.98
P2 1)*	=	11.75

Junction Cone

α *	=	40°
S *	=	38.35
r1 min	=	0.75
r2	=	3.20

Collar

H1 *	=	8.72
H2 1)	=	8.72

Volumes [cm³]

VC	=	3.073
Va 1	=	
Va 2	=	

Pressures (Energies)
Method Transducer [Va1]

Pmax	=	1150 bar
PK	=	1323 bar
PE	=	1495 bar
M	=	

Miscellaneous Dimensions

Fe	=	
delta L	=	

CHAMBER MINI

Lengths

L1	=	22.40
L2	=	26.52
L3 1)	=	35.00

Breech

R	=	
R1	=	12.03
R2	=	
R3	=	
r	=	

Powder Chamber

E	=	3.86
P1 1)	=	12.00
P2 *	=	11.80

Junction Cone

α 1)*	=	40°
S	=	38.61
r1 max	=	
r2	=	

Collar

H1 *	=	8.80
H2 1)	=	8.80

Commencement of Rifling

G1	=	8.80
G	=	
α1	=	180°
h	=	
s	=	
i	=	
w	=	

Barrel

F	=	16.00
Z	=	16.00

Volumes [cm³]

V(ET)	=	3.329
V(T)	=	

Dimensions in << mm >>
Dimensions and Tolerances for Proof Barrels
see Appendix CR 3.

Notes: 1) Check for safety reasons
* Basic dimensions