C.I.P.	38 S. & W. (9 x 19) Country of Origin: US	TAB. VI Date 84-06-14 Revision 90-06-13

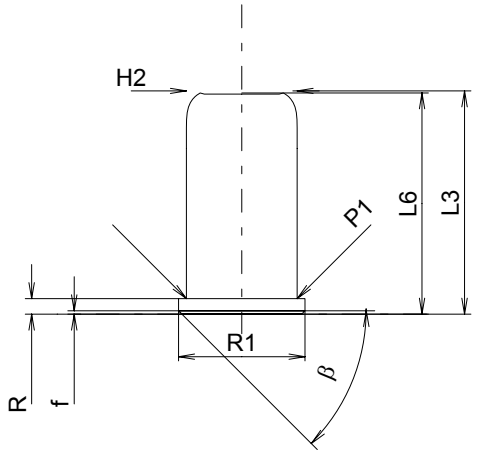

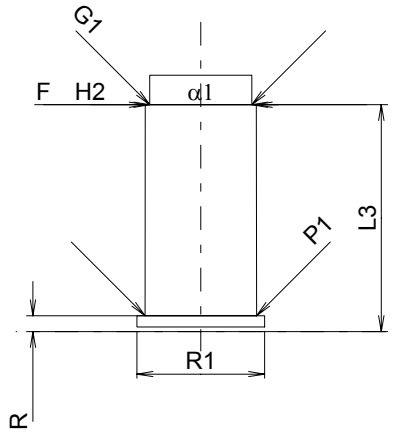

Scale 1.5:1

CARTRIDGE MAXI

Lengths

L1	=	
L2	=	
L3 1)	=	19.68
L4	=	
L5	=	
L6	=	19.50

Case Head

R	=	1.37
R1	=	11.15
R3	=	
E	=	
E1	=	
e min	=	
δ	=	
f	=	0.30
β	=	45°

Powder Chamber

P1	=	9.78
P2	=	

Junction Cone

α	=	
S	=	
r1 min	=	
r2	=	

Collar

H1	=	
H2 1)	=	9.78

Volumes [cm³]

VC	=	1.51
Va 1	=	0.40
Va 2	=	

Pressures (Energies)

Miscellaneous Dimensions

Fe	=	
delta L	=	

CHAMBER MINI

Lengths

L1	=	
L2	=	
L3 1)	=	20.00

Breech

R 1)	=	1.40
R1	=	11.25
R2	=	
R3	=	
r	=	

Powder Chamber

E	=	
P1	=	9.83
P2	=	

Junction Cone

α	=	
S	=	
r1 max	=	
r2	=	

Collar

H1	=	
H2	=	9.80

Commencement of Rifling

G1 *	=	9.00
G	=	
α1 *	=	180°
h	=	
s	=	
i	=	
w	=	

Barrel

F *	=	9.00
Z	=	9.00

Volumes [cm³]

V(ET)	=	1.54
V(T)	=	

Dimensions in << mm >>
Dimensions and Tolerances for Proof Barrels
see Appendix CR 3.

Notes: 1) Check for safety reasons
* Basic dimensions