| C.I.P. | 10 x 31<br>Country of Origin: RU | TAB. X<br>Date 16-10-18<br>Revision |
|---|---|---|

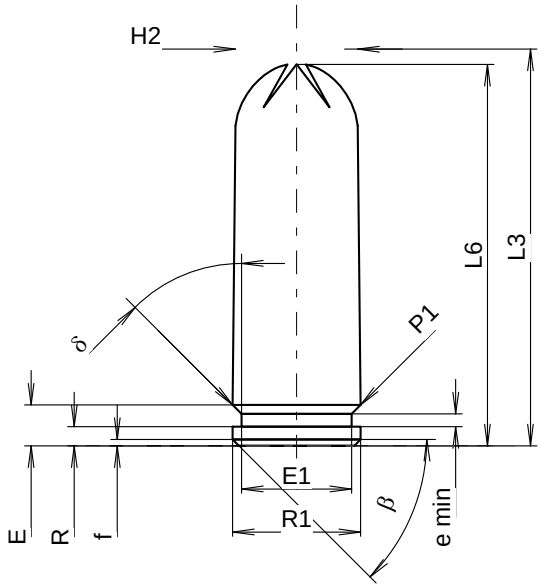


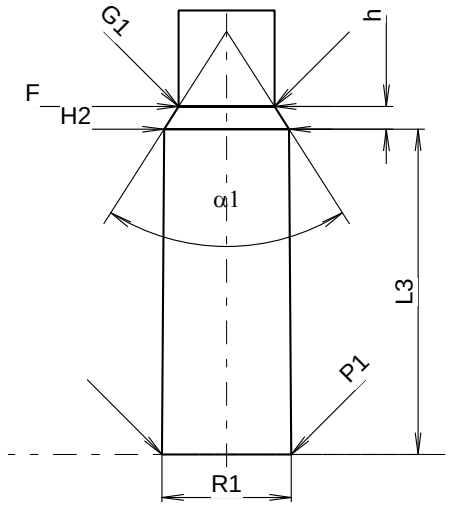


Scale 1.69:1

## CARTRIDGE MAXI

**Lengths**

| | | | |
|---|---|---|---|
| L1 | = | | |
| L2 | = | | |
| L3 1) | = | 31.00 | -0.25 |
| L4 | = | | |
| L5 | = | | |
| L6 1) | = | 29.80 | |

**Case Head**

| | | |
|---|---|---|
| R | = | 1.50 |
| R1 | = | 10.00 |
| R3 | = | |
| E | = | 3.20 |
| E1 | = | 8.60 |
| e min | = | 1.00 |
| δ | = | 45° |
| f | = | 0.50 |
| β | = | 45° |

**Powder Chamber**

| | | |
|---|---|---|
| P1 | = | 10.00 |
| P2 | = | |

**Junction Cone**

| | | |
|---|---|---|
| α | = | |
| S | = | |
| r1 min | = | |
| r2 | = | |

**Collar**

| | | |
|---|---|---|
| H1 | = | |
| H2 1) | = | 9.55 |

**Projectile**

| | | |
|---|---|---|
| G1 | = | |
| G2 | = | |
| F | = | |
| L3+G 1) | = | |

**Pressures (Energies)**
**Method Transducer**

| | | | |
|---|---|---|---|
| Pmax | = | 1800 | bar |
| PK | = | 2070 | bar |
| PE | = | 2340 | bar |
| M | = | 10.50 | |

**Miscellaneous Dimensions**

| | | |
|---|---|---|
| Fe 1) | = | |
| delta L | = | |

## CHAMBER MINI

**Lengths**

| | | |
|---|---|---|
| L1 | = | |
| L2 | = | |
| L3 1) | = | 25.41 |

**Breech**

| | | |
|---|---|---|
| R | = | |
| R1 | = | 10.10 |
| R2 | = | |
| R3 | = | |
| r | = | |

**Powder Chamber**

| | | |
|---|---|---|
| E | = | |
| P1 1) | = | 10.10 |
| P2 | = | |

**Junction Cone**

| | | |
|---|---|---|
| α | = | |
| S | = | |
| r1 max | = | |
| r2 | = | |

**Collar**

| | | |
|---|---|---|
| H1 | = | |
| H2 1) | = | 9.76 |

**Commencement of Rifling**

| | | | |
|---|---|---|---|
| G1 2)* | = | 7.50 | |
| G | = | | |
| α1 | = | 65° | |
| h * | = | 1.77 | |
| s | = | | |
| i | = | | |
| w | = | | |

**Barrel**

| | | | |
|---|---|---|---|
| F 2)* | = | 7.50 | |
| Z | = | | |

**Grooves**

| | | | |
|---|---|---|---|
| b | = | | |
| N | = | | |
| u | = | | |
| Q | = | 44.18 | mm² |

Dimensions in << mm >>
Dimensions and Tolerances for Proof Barrels
see Appendix CR5.

Notes:
1) Check for safety reasons
2) Valid only for Proof barrels
* Basic dimensions