C.I.P.	18,5 x 55 Country of Origin: RU	TAB. X Date 09-05-05 Revision

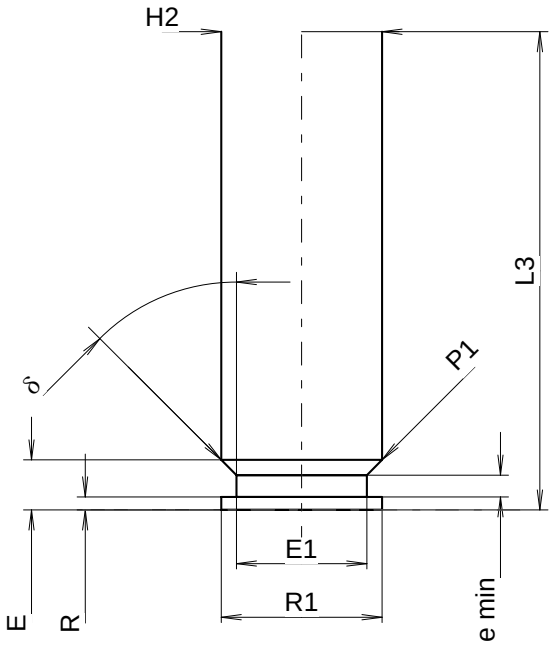

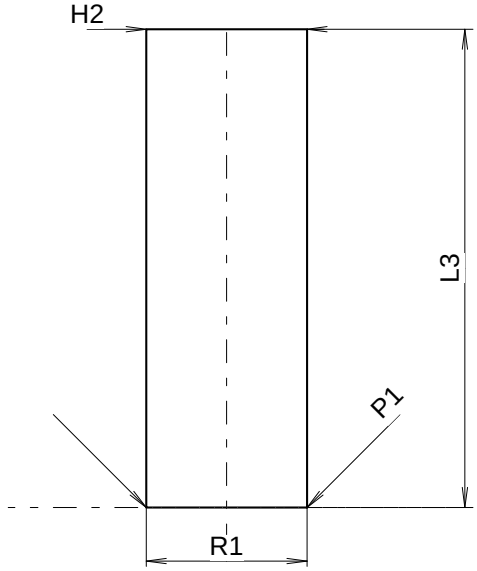

Scale 1.15:1

CARTRIDGE MAXI

Lengths

L1	=		
L2	=		
L3 1)	=	55.00	
L4	=		
L5	=		
L6	=		

Case Head

R	=	1.50	
R1	=	18.50	
R3	=		
E	=	5.75	
E1	=	15.00	
e min	=	2.50	
δ	=	45°	
f	=		
β	=		

Powder Chamber

P1 1)	=	18.50	
P2	=		

Junction Cone

α	=		
S	=		
r1 min	=		
r2	=		

Collar

H1	=		
H2 1)	=	18.50	

Projectile

G1	=		
G2	=		
F	=		
L3+G	=		

Pressures (Energies)

Energy

Emax	=	93.0	Joule
EK	=	100.0	Joule
EE	=	102.0	Joule

Miscellaneous Dimensions

Fe	=		
delta L	=		

CHAMBER MINI

Lengths

L1	=		
L2	=		
L3 2)	=	55.00	+0.46

Breech

R	=		
R1	=	18.50	
R2	=		
R3	=		
r	=		

Powder Chamber

E	=		
P1	=	18.50	
P2	=		

Junction Cone

α	=		
S	=		
r1 max	=		
r2	=		

Collar

H1	=		
H2 2)	=	18.50	+0.21

Commencement of Rifling

G1	=		
G	=		
α1	=		
h	=		
s	=		
i	=		
w	=		

Barrel

F	=		
Z	=		

Grooves

b	=		
N	=		
u	=		
Q	=		mm²

Dimensions in << mm >>
Dimensions and Tolerances for Proof Barrels
see Appendix .

Notes: 1) Check for safety reasons
2) Valid only for Proof barrels