C.I.P.	380 ME Gum Country of Origin: IT	TAB. X Date 99-08-04 Revision 02-05-15

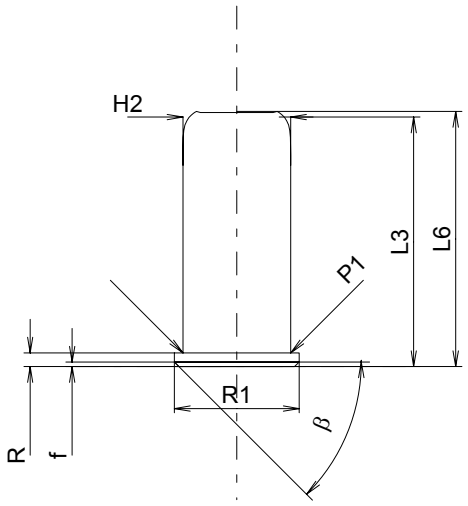

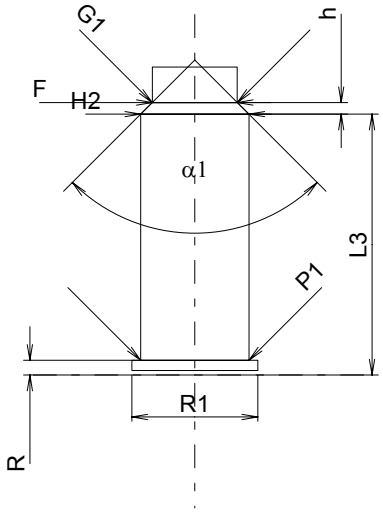

Scale 1.5:1

CARTRIDGE MAXI

Lengths

L1	=		
L2	=	22.00	
L3	=	22.00	
L4	=		
L5	=		
L6	=	22.50	

Case Head

R 1)	=	1.20	-0.10
R1	=	11.00	
R3	=		
E	=		
E1	=		
e min	=		
δ	=		
f	=	0.40	
β	=	45°	

Powder Chamber

P1	=	9.50
P2	=	

Junction Cone

α	=	
S	=	
r1 min	=	
r2	=	

Collar

H1	=	
H2 1)	=	9.50

Projectile

G1	=	
G2	=	
F	=	
L3+G	=	

Pressures (Energies)
Method Transducer

Pmax	=	300	bar
PK	=	345	bar
PE	=	390	bar
M	=	10.50	

Other Indications

Fe	=	
delta L	=	

CHAMBER MINI

Lengths

L1	=	
L2	=	
L3 1)	=	23.00

Breech

R 1)	=	1.30
R1	=	11.10
R2	=	
R3	=	
r	=	

Powder Chamber

E	=	
P1 1)	=	9.55
P2	=	

Junction Cone

α	=	
S	=	
r1 max	=	
r2	=	

Collar

H1	=	
H2 1)	=	9.55

Commencement of Rifling

G1 1)*	=	7.51	
G	=		
α1	=	90°	
h *	=	1.02	
s	=		
i	=		
w	=		

Barrel

F 1)*	=	7.50	
Z	=		

Grooves

b	=		
N	=		
u	=		
Q	=	44.18	mm²

Dimensions in << mm >>
Dimensions and Tolerances for Proof Barrels
see Appendix CR 1.

Notes: 1) Check for safety reasons
* Basic dimensions