C.I.P.	8,8 x 10 S.A.P.L. Country of Origin: FR	TAB. X Date 96-03-05 Revision 04-05-18

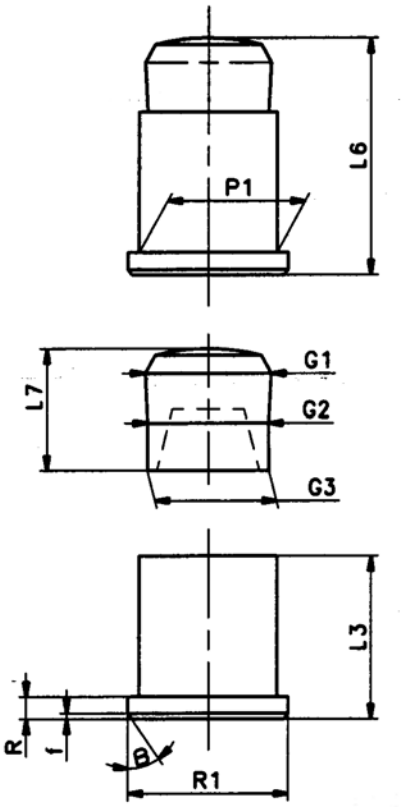

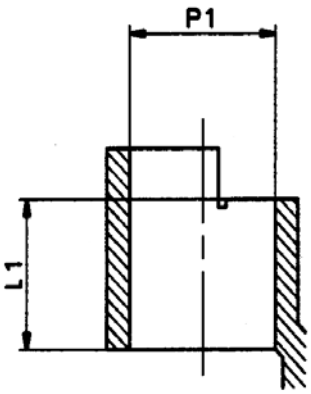

Scale 2:1

CARTRIDGE MAXI

Lengths

L1	=	
L2	=	
L3[1)]	=	10.85
L4	=	
L5	=	
L6	=	15.80

Case Head

R	=	1.50
R1	=	11.18
R3	=	
E	=	
E1	=	
e min	=	
δ	=	
f	=	0.38
β	=	35°

Powder Chamber

P1	=	9.63
P2	=	

Junction Cone

α	=	
S	=	
r1 min	=	
r2	=	

Collar

H1	=	
H2	=	

Projectile

G1	=	8.80
G2	=	8.43
G3	=	8.49

Height of Projectile

L7	=	8.10

Energy

Emax	=	6.0 Joule
EK	=	6.4 Joule
EE	=	6.6 Joule

CHAMBER MINI

Lengths

L1[1)*]	=	8.90
L2	=	
L3	=	

Breech

R	=	
R1	=	
R2	=	
R3	=	
r	=	

Powder Chamber

E	=	
P1[1)]	=	9.63
P2	=	

Junction Cone

α	=	
S	=	
r1 max	=	
r2	=	

Collar

H1	=	
H2	=	

Commencement of Rifling

G1	=	
G	=	
α1	=	
h	=	
s	=	
i	=	
w	=	

Barrel

F	=	
Z	=	

Dimensions in « mm »
Dimensions and tolerances for Proof Barrels
see appendix: CR 2

Notes : 1) Check for safety reasons
* Basic dimensions