C.I.P.	10 x 23 T Country of Origin: RU	TAB. X Date 05-05-25 Revision

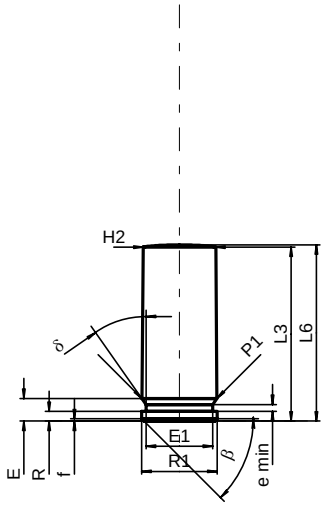

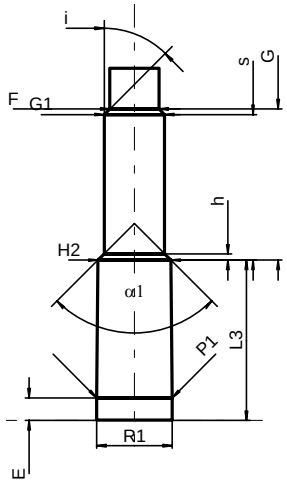

Scale 1:1

CARTRIDGE MAXI

Lengths

L1	=	
L2	=	22.70
L3 1)	=	23.00
L4	=	
L5	=	
L6 1)	=	23.30

Case Head

R	=	1.27
R1	=	9.96
R3	=	
E	=	2.98
E1	=	8.79
e min	=	0.90
δ	=	35°
f	=	0.30
β	=	45°

Powder Chamber

P1	=	9.93
P2	=	

Junction Cone

α	=	
S	=	
r1 min	=	
r2	=	

Collar

H1	=	
H2 1)	=	9.62

Projectile

G1	=	
G2	=	
F	=	
L3+G 1)	=	43.00

Pressures (Energies)
Method Transducer

Pmax	=	550	bar
PK	=	633	bar
PE	=	715	bar
M	=	10.50	

Miscellaneous Dimensions

Fe	=	
delta L	=	

CHAMBER MINI

Lengths

L1	=	
L2	=	
L3 1)	=	21.20

Breech

R	=	
R1	=	10.00
R2	=	
R3	=	
r	=	

Powder Chamber

E	=	2.98
P1 1)	=	9.98
P2	=	

Junction Cone

α	=	
S	=	
r1 max	=	
r2	=	

Collar

H1	=	
H2 1)	=	9.65

Commencement of Rifling

G1	=	8.00
G	=	20.00
α1	=	90°
h	=	0.82
s	=	19.25
i	=	45°
w	=	

Barrel

F	=	6.50
Z	=	

Grooves

b	=		
N	=		
u	=		
Q	=	33.17	mm²

Dimensions in << mm >>
Dimensions and Tolerances for Proof Barrels
see Appendix CR 1.

Notes: 1) Check for safety reasons